PRODUCT INFORMATION PACKET

Model No: 048A11O2053
Catalog No: X419
1/2,1075,OPEN,48Y,1/60/208-230
Direct Drive

Regal and Marathon are trademarks of Regal Beloit Corporation or one of its affiliated companies.
©2018 Regal Beloit Corporation, All Rights Reserved. MC017097E

Nameplate Specifications

Output HP	**0.50 Hp**	Output KW	**0.37 kW**
Frequency	**60 Hz**	Voltage	**208-230 V**
Current	**4.2 A**	Speed	**1075 rpm**
Service Factor	**1**	Phase	**1**
Efficiency	**66 %**	Duty	**Continous**
Insulation Class	**B**	Design Code	**NO DESIGN CODE**
KVA Code	**D**	Frame	**48Y**
Enclosure	**Open Air Over**	Overload Protector	**Auto Lock Rotor Only**
Ambient Temperature	**40 °C**	Drive End Bearing Size	**6203**
Opp Drive End Bearing Size	**6203**	UL	**Recognized**
CSA	**Y**	CE	**N**
IP Code	**01**		

Technical Specifications

Electrical Type	**Permanent Split Capacitor**	Starting Method	**Across The Line**
Poles	**6**	Rotation	**Selective Counterclockwise**
Mounting	**Round - Extended Studs**	Motor Orientation	**Horizontal**
Drive End Bearing	**Ball**	Opp Drive End Bearing	**Ball**
Frame Material	**Rolled Steel**	Shaft Type	**Single Special Extension**
Overall Length	**12.19 in**	Frame Length	**4.75 in**
Shaft Diameter	**0.500 in**	Shaft Extension	**6.06 in**
Assembly/Box Mounting	**F1 Only**		
Outline Drawing	**A-SS74450-475**	Connection Diagram	**6906496**

This is an uncontrolled document once printed or downloaded and is subject to change without notice. Date Created: 06/28/2018

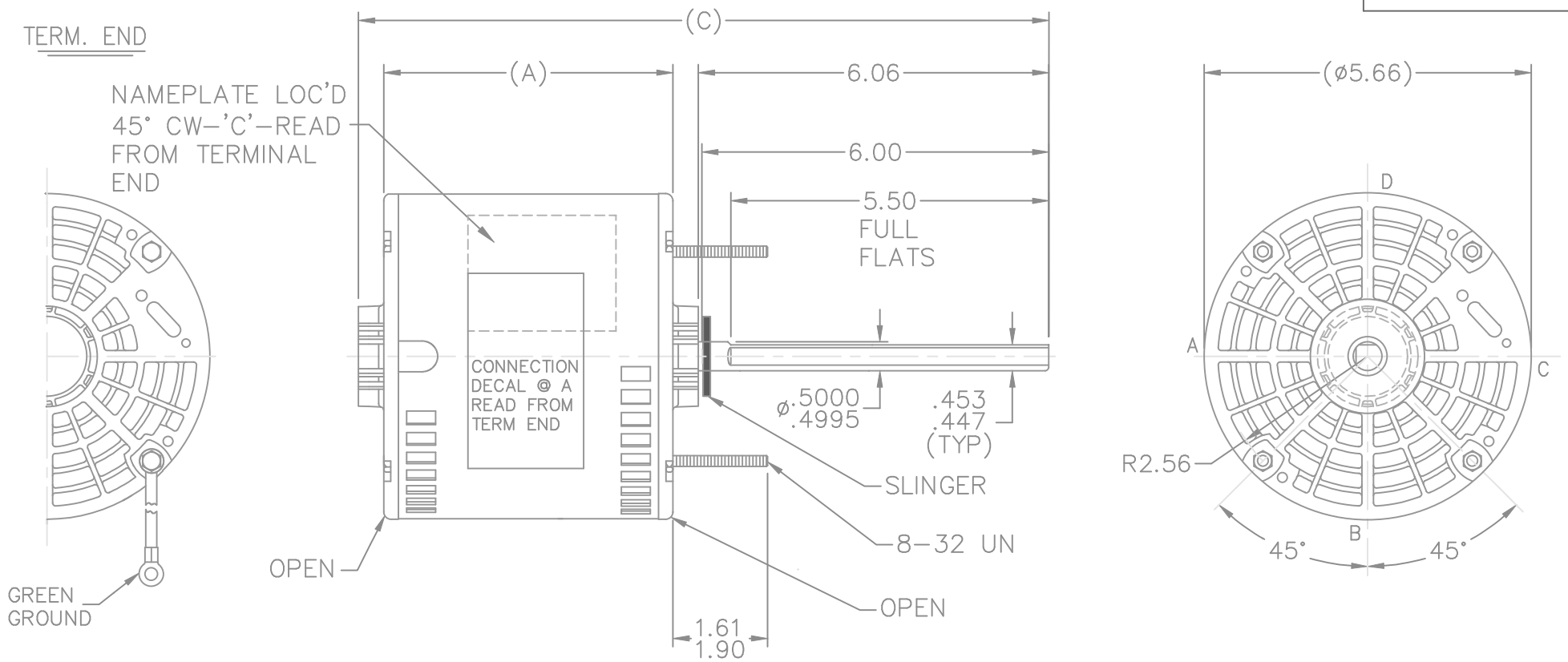

DASH	FRAME	C	A
375	48Y	11.19	4.25
400	48Y	11.44	4.50
425	48Y	11.69	4.75
450	48Y	11.94	5.00
475	48Y	12.19	5.25
500	48Y	12.44	5.50

5/27/09

LEAD DESCRIPTION:

1 BLACK, AND 1 WHITE LEAD WITH .50 BARE WIRE STRIP 30.00" LONG.

2 BROWN CAPACITOR LEADS WITH .25 FLAG–TYPE QUICK CONNECTS 30.00" LONG BROWN WITH WHITE MARK IS COMMON TO WHITE LEAD.

REVERSING LEADS ARE MOLDED INTO MATING PULL APART PLUGS 1 PURPLE, AND 1 YELLOW PER PLUG 5.00" LONG.

GREEN GROUND LEAD WITH TERM. FOR #10 SCREW 12.00" LONG.

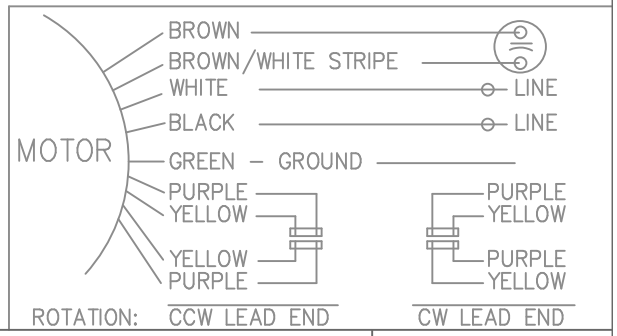

NO.	REVISION	BY & DATE	CHK
6	UPDATED DRAWING	TJW 04/13/2007	
5	REDRAWN IN AUTOCAD	TAT 08–03–2004	ML
4	REAR BRACKET WAS IDENTIFIED WRONG	BRH 04–19–1996	
3	REV. NAMEPLATE LOC., ADD'D SLINGER CN 21725–385	BLR 04–16–1996	
2	REDRAWN AND REVISED LEAD LENGTHS CN 21148	BLR 09–28–1995	

TOLERANCES UNLESS SPECIFIED	
DEC.	INCHES
.X	±.1
.XX	±.03
.XXX	±.005
.XXXX	±.0005
ANG	±7'30"

MARATHON ELECTRIC

TITLE OUTLINE

MAT'L.

FINISH

CAD FILE ss74450

RFP

DIST WP

DRAWN	BLR 09–14–1995
CHK	DA 09–28–1995
APPD	GK 09–28–1995
SCALE	3=8
REF	
FMF	
PREV	

SIZE	DRAWING NO.	PAGE OF	REV.
A	SS74450		6

THIS DRAWING IN DESIGN AND DETAIL IS OUR PROPERTY AND MUST NOT BE USED EXCEPT IN CONNECTION WITH OUR WORK ALL RIGHTS OF DESIGN AND INVENTION ARE RESERVED
THIS IS AN ELECTRONICALLY GENERATED DOCUMENT – DO NOT SCALE THIS PRINT

5/27/2009 9:40:39 AM

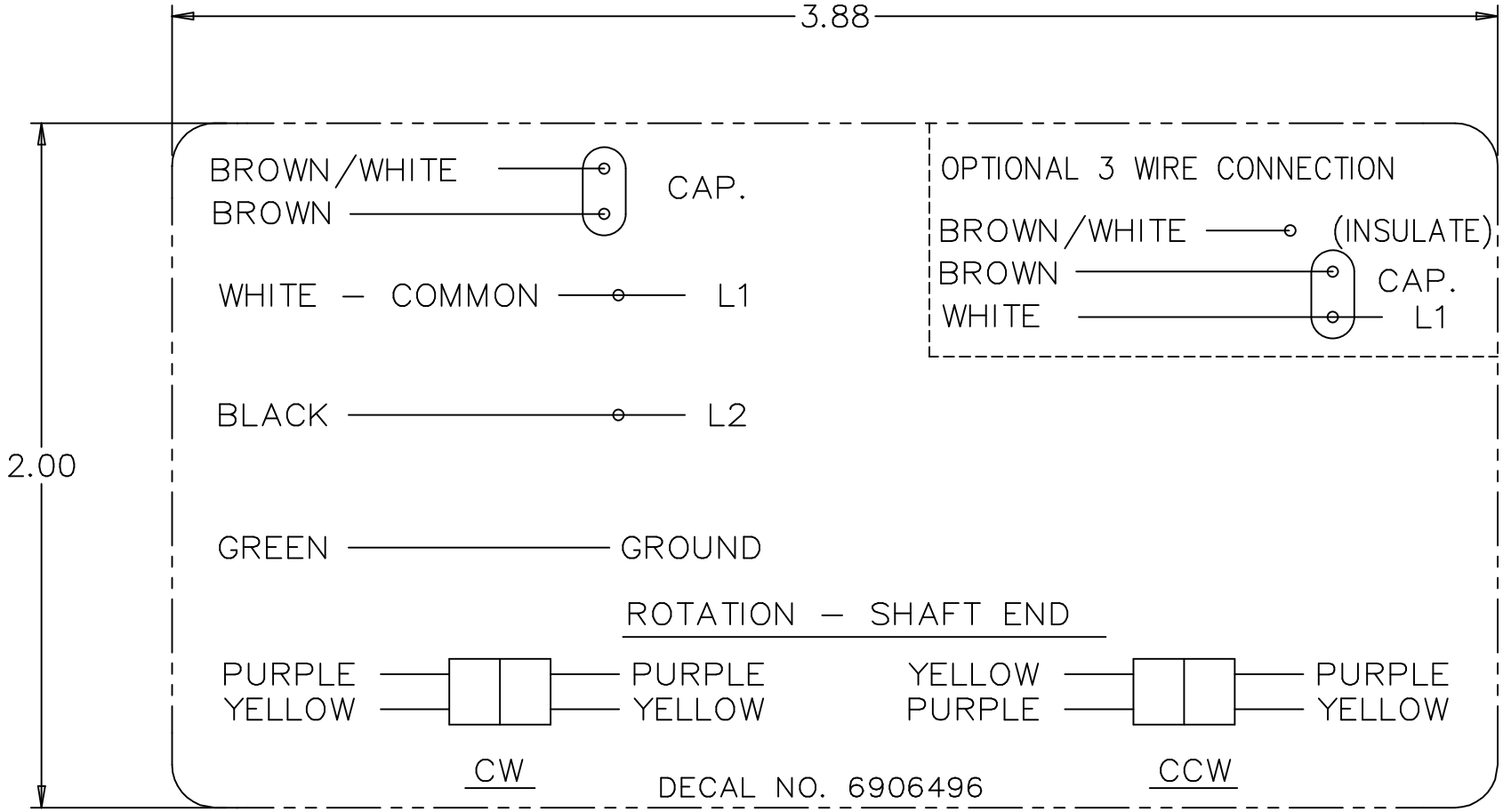

NO.	REVISION	BY & DATE	CHK
4	ADDED DIM. TO DECAL	RDH 09/22/2003	ML
3	REMOVED 'MARATHON ELECTRIC' CN 35106	DRS 05-01-2002	TOM
2	PART NAME WAS CONNECTION DIAGRAM CN 25669	MRB 04-23-1998	
1	NEW DRAWING CN 25669	MRB 04-22-1998	

TOLERANCES UNLESS SPECIFIED	
DEC.	INCHES
.X	±.1
.XX	±.02
.XXX	±.005
.XXXX	±.0005
ANG	±7'30"

REGAL-BELOIT Motor Technologies

TITLE CONNECTION DECAL

MAT'L.

FINISH

CAD FILE 6906496

RFP

DIST WP

DRAWN	MRB 04-16-1998
CHK	ML 04-22-1998
APPD	GK 04-22-1998
SCALE	1=1
REF	
FMF	
PREV	

SIZE	DRAWING NO.	PAGE OF	REV.
A	6906496		4

THIS DRAWING IN DESIGN AND DETAIL IS OUR PROPERTY AND MUST NOT BE USED EXCEPT IN CONNECTION WITH OUR WORK ALL RIGHTS OF DESIGN AND INVENTION ARE RESERVED
THIS IS AN ELECTRONICALLY GENERATED DOCUMENT – DO NOT SCALE THIS PRINT

Uncontrolled Copy

CERTIFICATION DATA SHEET

Model#:	48A11O2053 E	**WINDING#:**	PE4861177 NONE 2
CONN. DIAGRAM:	6906496	**ASSEMBLY:**	F1 ONLY
OUTLINE:	A-SS74450-475		

TYPICAL MOTOR PERFORMANCE DATA

HP	KW	SYNC. RPM	F.L. RPM	FRAME	ENCLOSURE	KVA CODE	DESIGN
1/2	.37	1200	1075	48Y	OPAO	D	NO DESIGN CODE

PH	Hz	VOLTS	FL AMPS	START TYPE	DUTY	INSL	S.F	AMB°C	ELEVATION
1	60	208-230	4.2	ACROSS THE LINE	CONTINUOUS	B3	1.0	40	3300

FULL LOAD EFF: -	3/4 LOAD EFF: -	1/2 LOAD EFF: -	GTD. EFF	ELEC. TYPE	NO LOAD AMPS
FULL LOAD PF: -	3/4 LOAD PF: -	1/2 LOAD PF: -	0	PSC 1 SPEED	2.1

F.L. TORQUE	LOCKED ROTOR AMPS	L.R. TORQUE	B.D. TORQUE	F.L. RISE°C
37.1 LB-FT	9.9	9.69 LB-FT -	67.4 LB-FT -	0

SOUND PRESSURE @ 3 FT.	SOUND POWER	ROTOR WK^2	MAX. WK^2	SAFE STALL TIME	STARTS /HOUR	APPROX. MOTOR WGT
- dBA	- dBA	0 LB-FT^2	- LB-FT^2	- SEC.	-	0 LBS.

*** SUPPLEMENTAL INFORMATION ***

DE BRACKET TYPE	ODE BRACKET TYPE	MOUNT TYPE	ORIENTATION	SEVERE DUTY	HAZARDOUS LOCATION	DRIP COVER	SCREENS	PAINT
STANDARD	STANDARD	ROUND-EXTENDED STUDS	HORIZONTAL	FALSE	NONE	FALSE	NONE	GRAY (POWDER)

BEARINGS		GREASE	SHAFT TYPE	SPECIAL DE	SPECIAL ODE	SHAFT MATERIAL	FRAME MATERIAL
DE	OPE						
BALL	BALL	BEACON 325	SGL SPL EXT	0.500 x 6.00 WITH 5.50 DBL FULL FLATS	NONE	1144 STRESSPROOF (C-223)	ROLLED STEEL
6203	6203						

THERMO-PROTECTORS				THERMISTORS	CONTROL	SPACE /n HEATERS
THERMOSTATS	PROTECTORS	WDG RTDs	BRG RTDs			
NONE	AUT LCK RTR ONLY	NONE	NONE	NONE	FALSE	NONE VOLTS

If Inverter equals NONE, contact factory for further information

INVERTER TORQUE: NONE
INV. HP SPEED RANGE: NONE

ENCODER: NONE
NONE NONE
NONE NONE PPR

BRAKE: NONE NONE
NONE P/N NONE
NONE NONE
NONE FT-LB NONE V NONE Hz

*
N
O
T
E
S
*

DATE: 06/27/2017 05:18:00 AM
FORM 3531 REV.3 02/07/99
** Subject to change without notice.

Uncontrolled Copy